VILLA TRUSS

VALLEY TRUSS

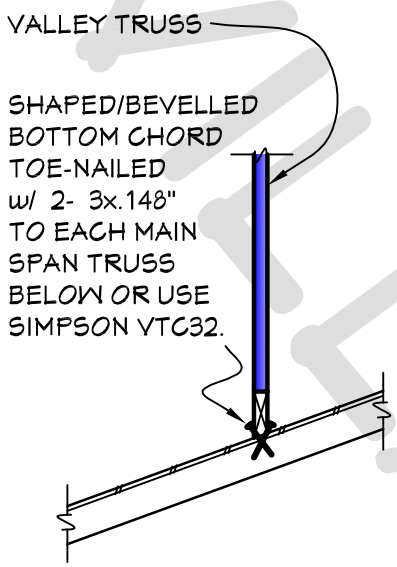

SECTION

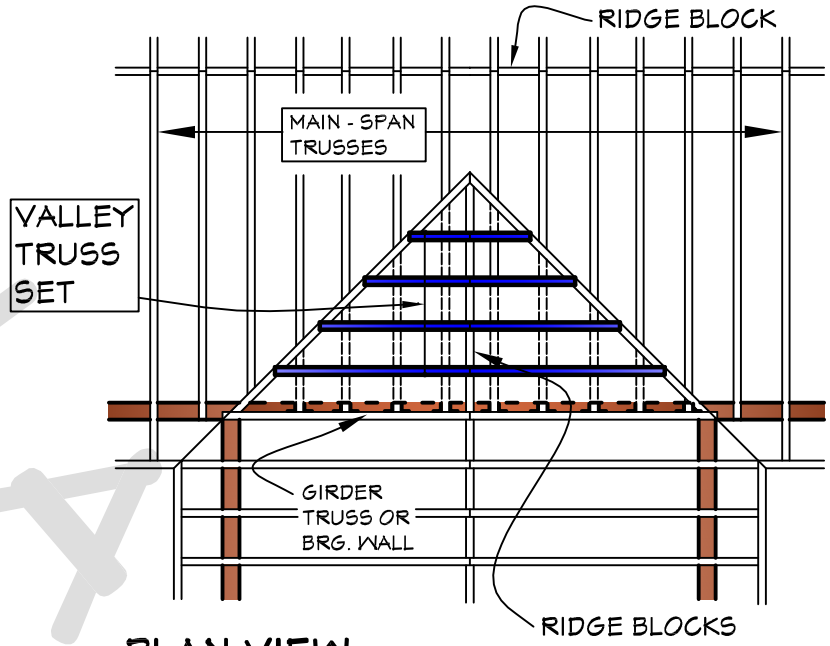

PLAN VIEW

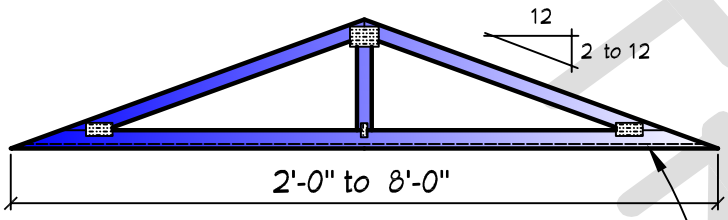

ELEVATION

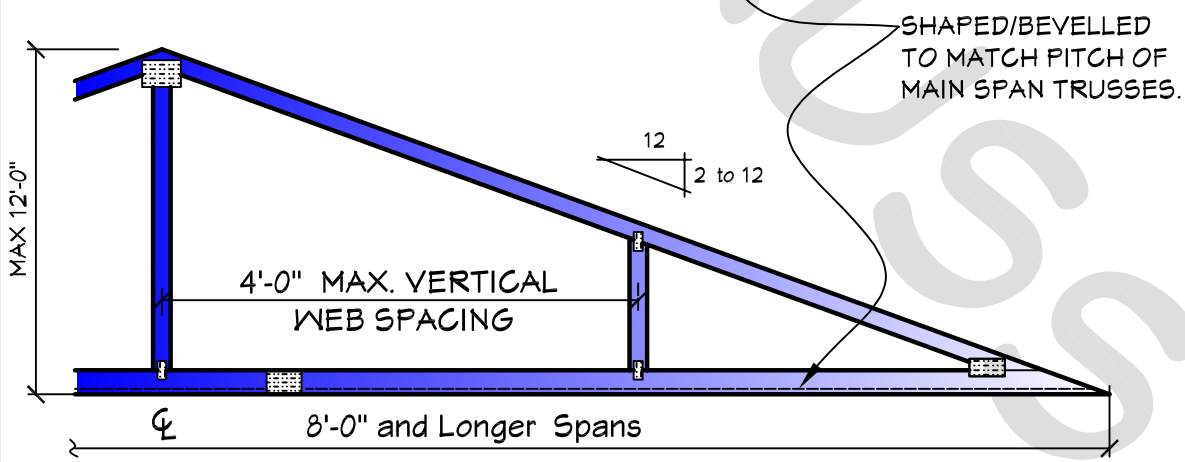

ELEVATION

Copyright 2010 Integrated Truss Systems, Inc. - d.b.a. VILLA TRUSS. 1320 E. Victor Road, Lodi, CA 95240 (209) 333-7117